CATALOG NUMBER	DESCRIPTION
HU36RT	600 kcmil, 22 INDEX DIE SET

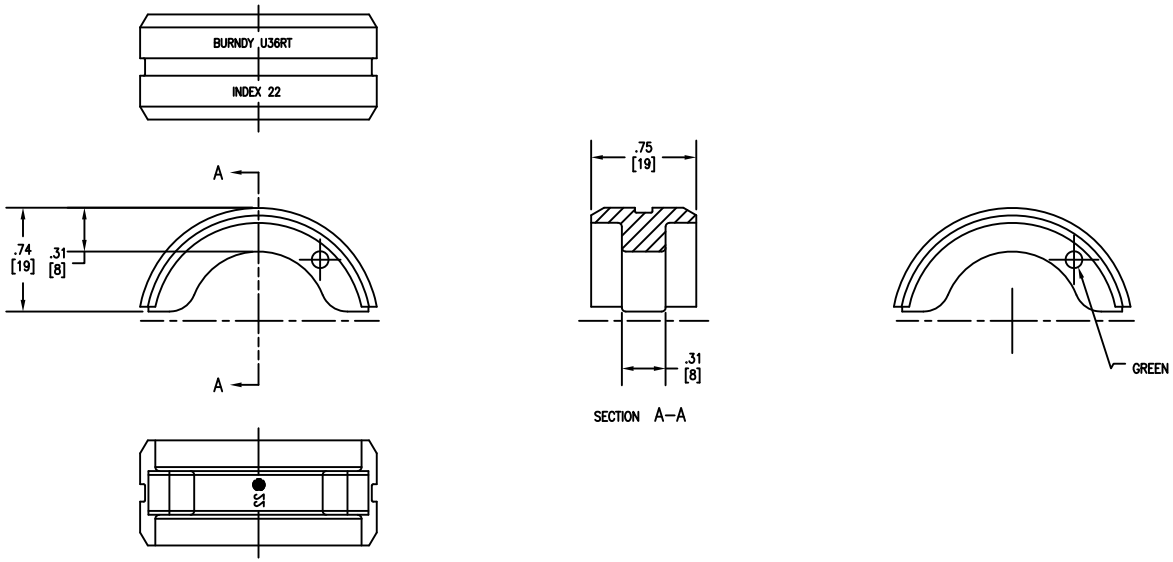

NOTES:

1. MATERIAL: STAINLESS STEEL.
2. SPECIFICATIONS SUBJECT TO CHANGE WITHOUT NOTICE.

REV.	ECN	DATE	DESCRIPTION	CHG BY	APPD BY
1	18075	01/25/13	INITIAL RELEASE	MMA	

Created on AUTOCAD

DIMENSIONING AND TOLERANCE PER ANSI Y14.5M–1982
UNLESS OTHERWISE SPECIFIED, DIMENSIONS ARE IN INCHES (MM).
TOLERANCES
.XX = ±.01 (.25)
.XXX = ±.005 (.127)
.XXXX = ±.0025 (.0635)
ANGLE TOL ±1°

IN ACCEPTING OUR DRAWINGS, BLUEPRINTS, OR SUPPORTING DOCUMENTATION FOR QUOTATION OR OTHER PURPOSES, YOU AGREE NOT TO DISCLOSE TO OTHERS THE IDEAS, INFORMATION, OR DESIGNS SHOWN HEREIN, AND THAT YOU WILL MAKE NO USE OF SAME WITHOUT PERMISSION

PROJECT REFERENCE: 2011-041
MATERIAL: SEE NOTES
DRAWN BY: M. ABBY 01/23/13
CHECKED BY:
APPROVED BY:

Hubbell Premise Wiring
HUBBELL INCORPORATED (Delaware)
23 CLARA DRIVE, SUITE 103 MYSTIC, CT 06355

TITLE: DIE SET, 500 kcmil, 20 INDEX
U DIE SET FAMILY

SIZE: C
DRAWING NO.: HWS14231C
REV.: 1
SCALE: 1/1
SHEET 1 OF 1